0 600 889 503

Stand ~~00-08~~
Issue 00-09-04

**Fig./Abb. 1**

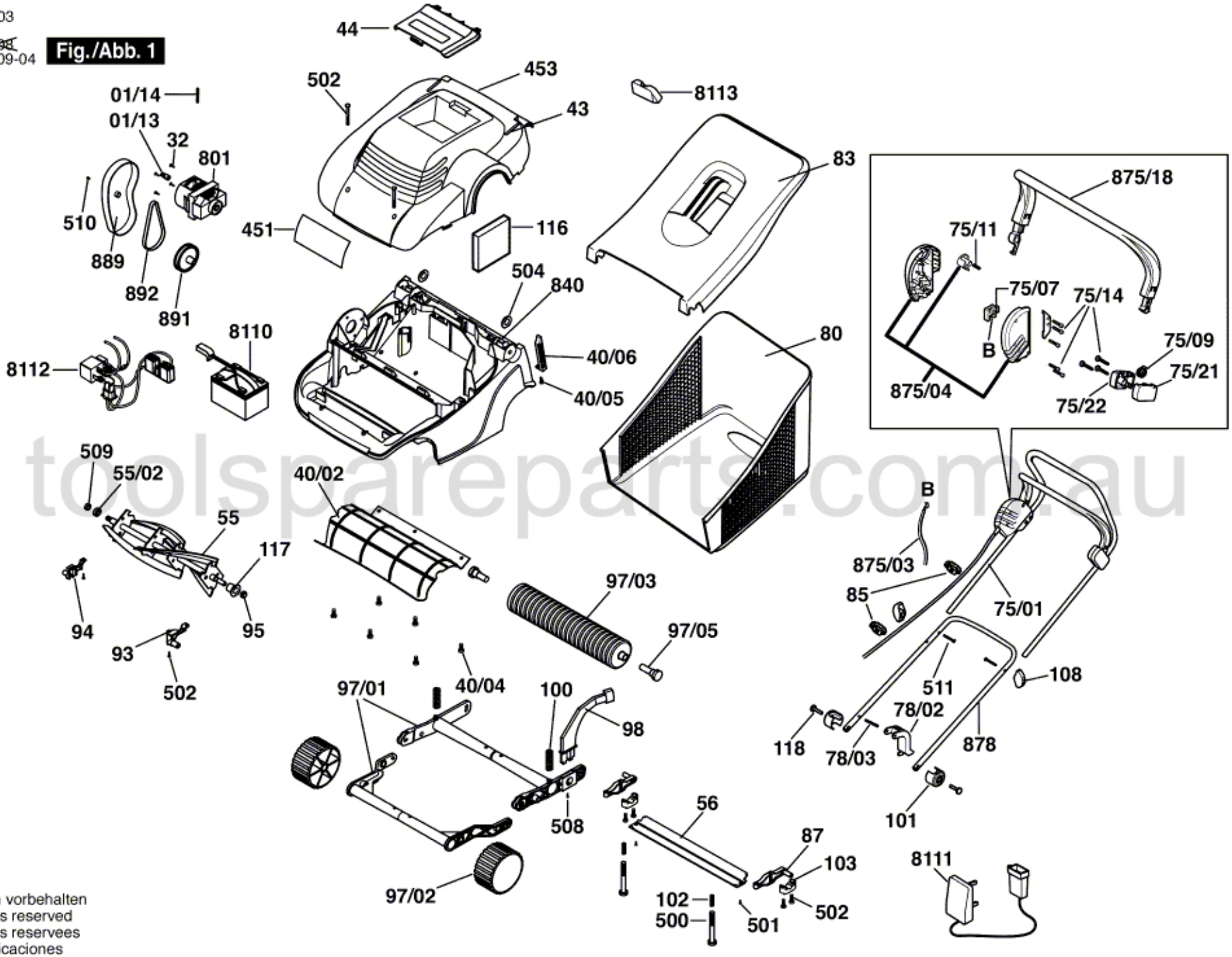


toolspareparts.com.au

Änderungen vorbehalten
Modifications reserved
Modifications reservees
Salvo modificaciones